NOZZLE SCHEDULE & ACCESSORIES					
NO.	QTY	SIZE	DESCRIPTION	DEG	ELEV

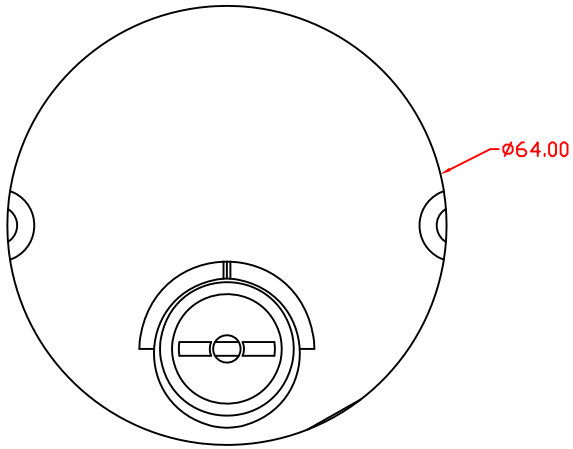

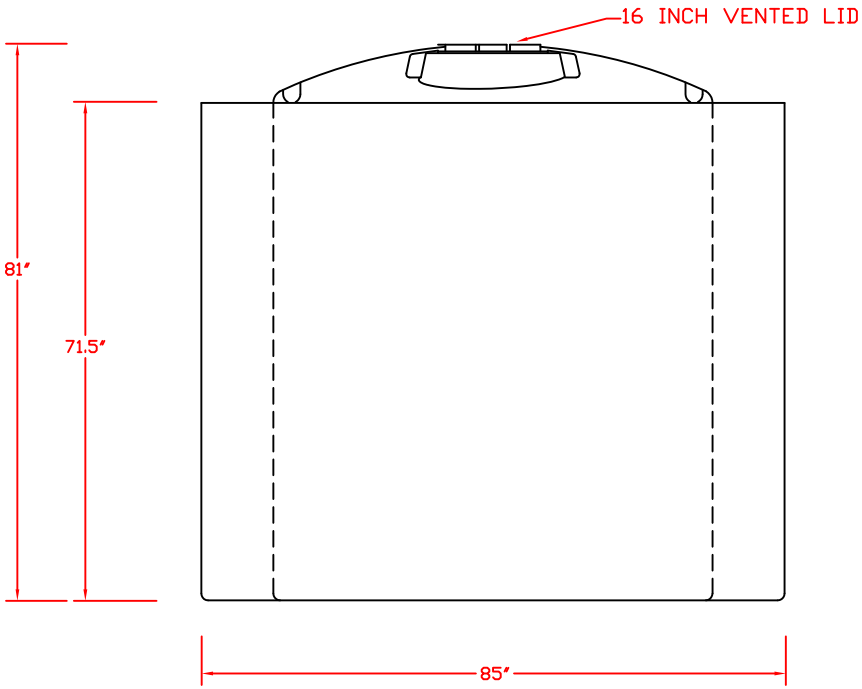

GENERAL NOTES:

1. MATERIAL: TANK TO BE ONE PIECE MOLDED OF HIGH DENSITY POLYETHYLENE, COLOR: NATURAL, DESIGNED FOR CONTENTS TO S.G.
2. CONTENTS:
3. OPERATING TEMP:
4. FLANGES TO BE HAND WELDED W/ NITROGEN GAS
5. ORIENT ALL FITTINGS FROM PLAN VIEW
6. TANK REQUIRES 100% BOTTOM SUPPORT
7. ALL PIPING & VALVES MUST HAVE IT'S OWN SUPPORT AND ALLOW FOR TANK EXPANSION & CONTRACTION
8. TANK IS TO BE LOCATED
9. TANK IS DESIGNED FOR ATMOSPHERIC PRESSURE

QUAN. REQ.: ( )

THIS DRAWING IS PROPERTY OF PROTECTOPLAS COMPANY. IT MAY NOT BE ALTERED OR COPIED WITHOUT WRITTEN PERMISSION FROM PROTECTOPLAS COMPANY.

REV	DATE	BY	REMARKS

CUSTOMER:

TITLE: 1000 GAL DW

PROTECTOPLAS COMPANY
DIVISION OF EBCO, INC.
BEDFORD, OHIO 44146 USA

SCALE: NTS	BY: ZE	DATE:	DWG.NO.: